systemtronic
Wing TV Stand

1600 mm wide TV stand designed for individual use or to form compositions with the Wing shelves. Includes a rear panel that hides the connections. Supports screens up to 70”, with a maximum width of 1600 mm. VESA 100, 200, 300, 400 and 600 mounting interface standard. Both in its home and office versions, this product can be wall-mounted or freestanding.

Year of launch: 2022.

GOOD DESIGN

DESIGN AWARD 2022

Mario Ruiz

A graduate of Industrial Design from Barcelona’s Elisava University School of Design and Engineering, Mario Ruiz stands out for his discretion, allowing products to speak for themselves through their clean and coherent lines. His designs speak volumes in their simplicity; they live with their users without being conspicuous. His extensive career experience is remarkable for its multidisciplinarity and international projection, with projects that span furniture, lighting and technology design, architecture and creative direction.

COMPONENTS AND MATERIALS

1. Shelves
The body of the shelves is an extruded aluminum profile, manufactured from its matrix, specifically designed for this shelving unit. The depth of the shelf is 325 mm. It has rounded corners. The total thickness in the center is 15 mm, reducing on both sides symmetrically and gradually, until showing off its edges of barely 2,5 mm in thickness, which highlights its lightness.
Standard shelf length measurement: 1600 mm.

2. Upstands
Manufactured in extruded aluminum from its matrix, which defines the thickness of 17 mm and the depth of 134 mm.
The standard height of these upstands is 340 mm. Thereby enabling the convenient storage of folders.

3. TV Wing bracket assembly
The TV anchoring system is supported on these 1050 mm high uprights. Includes rear and lower trim that hide the wiring and connections.
VESA 100, 200, 300, 400 and 600 mounting interface standard.

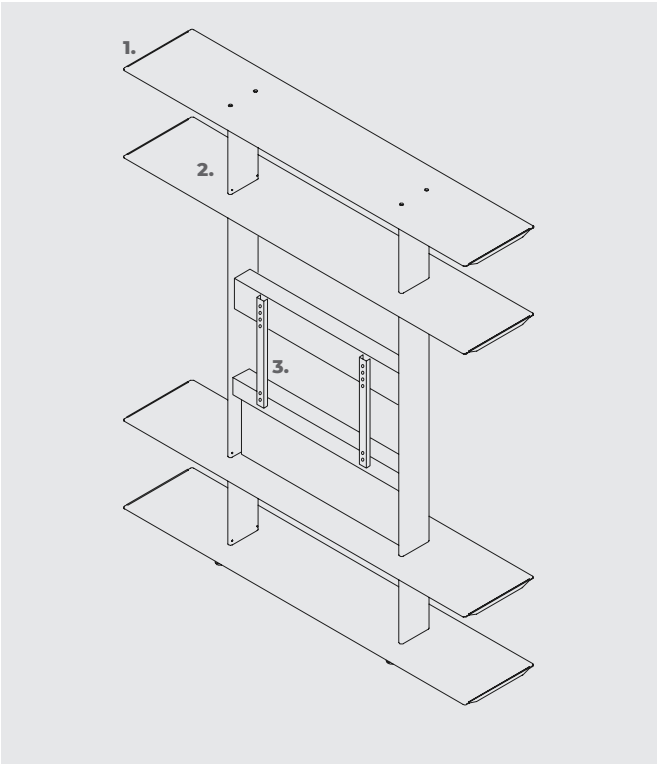

WING 1600 WALL AND FREESTANDING

Home TV Stand

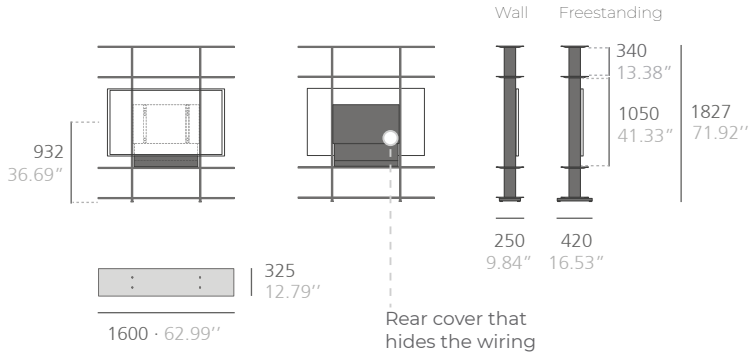

Office TV Stand

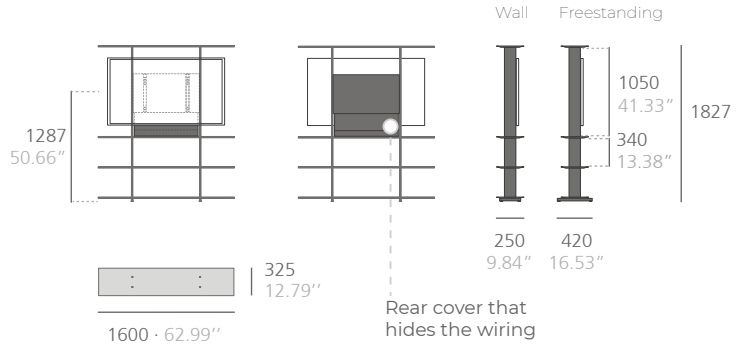

Home Basic TV Stand

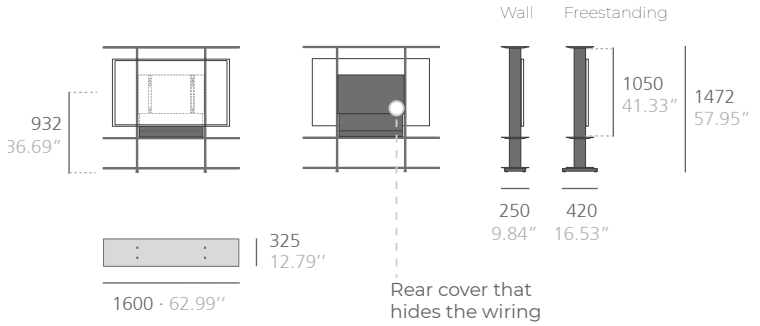

FINISHES (for especial finishes and dimensions, consult)

Group 1

Textured white
RAL 9003

Textured black
RAL 9011

Paint

High coverage thermoset polyester powder coating.

Group 2

Textured silk grey
RAL 7044

Textured silver
grey RAL 7001

Textured reseda
green RAL 6011

Textured beige
red RAL 3012

Textured tomato
red RAL 3013

Forge gray

Group 3

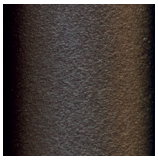

Textured
bronze bagana

Textured
rust rame

MAINTENANCE

-Polyester paint:
For dry dirt (dust), a damp cloth is recommended.
For greasy/oily dirt (fingerprints), wiping with a wet sponge and washing-up liquid (Vim liquid) and then a damp cloth is advised.
The use of detergents containing solvents and/or pure ethyl alcohol should be avoided.

-Wood:
Using a cloth or products sold specifically for cleaning natural wood is advised.
Products containing solvents and/or alcohol should be avoided.

-Aluminum-metal-glass-melamine-plastic material:
Using a cloth or products sold specifically for cleaning natural wood is advised.
Products containing solvents and/or alcohol should be avoided.

SUSTAINABILITY

The flexibleand extremely adaptable design of the products in the Wingcollection allows them to be reused, resulting in a longerlifespan. They are made with 100 % recyclable materials. Atleast 25 % of the aluminum used is recycled. The paints do notcontain solvents, do not consume water and do not generateemissions or waste. The result is a lower environmental impact.