systemtronic
datasheet KOKU

Delta Awards finalist 2013.

General description:

Original bookshelf designed to cover space and functionality requirements.
Manufactured in steel sheet and has a simple wall mounting system.

Designer: Hugo Tejada.

Year of launch: 2012.

systemtronic _ Koku
www.st-systemtronic.com
nacional@st-systemtronic.com · export@st-systemtronic.com
tel. 96-1852784 · fax.34-961854482

ASSOCIATED Nº00320 AIDIMME INSTITUTO TECNOLÓGICO METALMECÁNICO, MUEBLE, MADERA, EMBALAJE Y AFINES
Calidad Controlada

Technical description:

Material: Steel.

Dimensions: 283x172x71 mm 11.04x6.71x2.77 ″

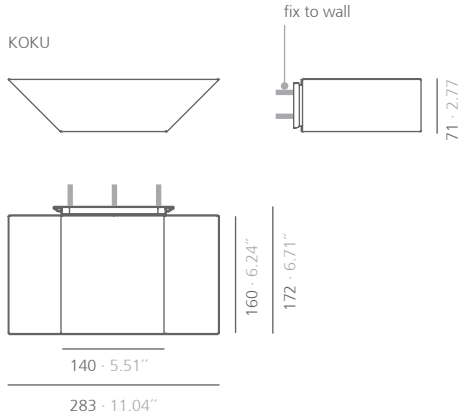

mm · inches

Finishes:

matte white RAL 9003	satin black RAL 9011	matte grey beige RAL 1019	mustard gloss RAL 1012	textured red RAL 3001	textured blue RAL 5011	textured garnet RAL 3005	textured green RAL 6009	textured red sirung
textured bronze bagana	textured rust rame							

*Polyester paint

Consult for special dimensions or any other modification.

Assembly:

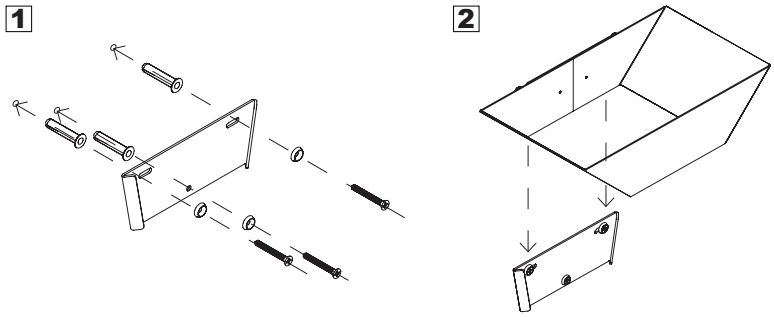

Maximum recommended weight
8 kg/ 17.63lb

Maintenance:

-Polyester Paint:
For dry dirt (dust), use a damp cloth. For greasy/oily stains (fingerprints), wipe with a sponge with water and dishwashing liquid. Rinse with a damp cloth. Avoid using products containing solvents and/or pure ethyl alcohol.

-Aluminium-metal-glass-melamine-plastic:
We recommend using normal cleaning products for delicate surfaces. Alcohol, solvents and abrasive agents must be avoided.

systemtronic _ Koku
www.st-systemtronic.com
nacional@st-systemtronic.com · export@st-systemtronic.com
tel. 96-1852784 · fax.34-961854482

ASSOCIATED Nº00320 AIDIMME INSTITUTO TECNOLÓGICO METALMECÁNICO, MUEBLE, MADERA, EMBALAJE Y AFINES
Calidad Controlada

Sustainability:

Manufacturing materials are 100 % recyclable. The used paints do not contain solvents, do not consume water and do not generate emissions or waste. The result is a lower environmental impact.

systemtronic _ Koku
www.st-systemtronic.com
nacional@st-systemtronic.com · export@st-systemtronic.com
tel. 96-1852784 · fax.34-961854482

ASSOCIATED Nº00320 AIDIMME INSTITUTO TECNOLÓGICO METALMECÁNICO, MUEBLE, MADERA, EMBALAJE Y AFINES
Calidad Controlada