systemtronic
datasheet KER

General description:

Exclusive coat stand formed by beech wood bars and a steel ring, painted in several colours.

Designer: Lluïsa Morató.

Year of launch: 2010.

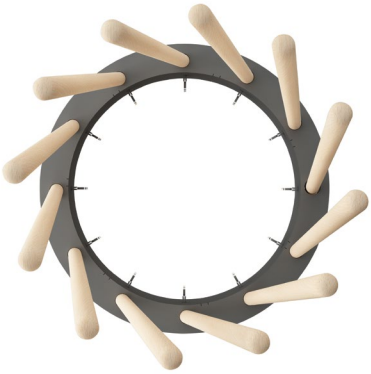

systemtronic _ Ker
www.st-systemtronic.com
nacional@st-systemtronic.com · export@st-systemtronic.com
tel. 96-1852784 · fax.34-961854482

ASSOCIATED Nº00320 AIDIMME INSTITUTO TECNOLÓGICO METALMECÁNICO, MUEBLE, MADERA, EMBALAJE Y AFINES
Calidad Controlada

Technical description:

Materials:
Ring: Steel.
Bars: Beech wood.

Dimensions: Ø530x1490mm Ø20.87x58.66 ″

KER

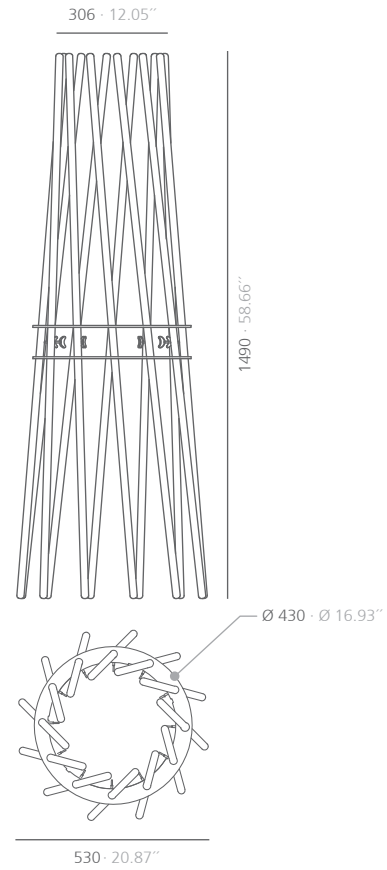

mm · inches

Finishes:

Ring									Bars
textured white	textured black RAL 9011	textured forged grey	textured blue RAL 5011	textured garnet RAL 3005	textured green RAL 6009	textured red sirung	textured bronze bagana	textured rust rame	beech wood

*Polyester paint

Consult for special dimensions or any other modification.

systemtronic _ Ker
www.st-systemtronic.com
nacional@st-systemtronic.com · export@st-systemtronic.com
tel. 96-1852784 · fax.34-961854482

ASSOCIATED Nº00320 AIDIMME INSTITUTO TECNOLÓGICO METALMECÁNICO, MUEBLE, MADERA, EMBALAJE Y AFINES
Calidad Controlada

Maintenance:

-Polyester Paint:
For dry dirt (dust), use a damp cloth. For greasy/oily stains (fingerprints), wipe with a sponge with water and dishwashing liquid.
Rinse with a damp cloth. Avoid using products containing solvents and/or pure ethyl alcohol.

-Aluminium-metal-glass-melamine-plastic:
We recommend using normal cleaning products for delicate surfaces. Alcohol, solvents and abrasive agents must be avoided.

-Wood:
We recommend using a cloth or cleaning products for natural wood. Avoid using products containing solvents and/or alcohol.

Sustainability:

The used paints do not contain solvents, do not consume water and do not generate emissions or waste. The result is a lower environmental impact.

Assembly:

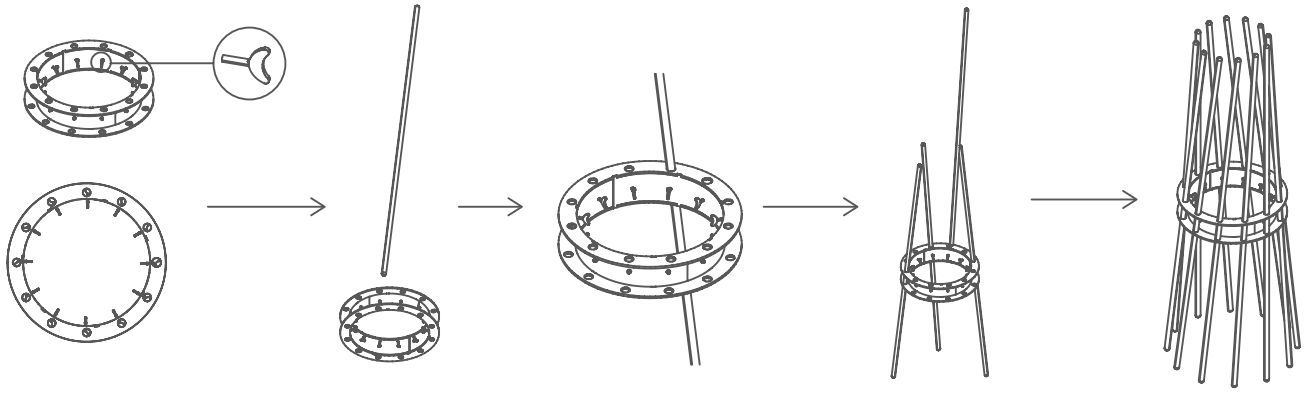

systemtronic _ Ker
www.st-systemtronic.com
nacional@st-systemtronic.com · export@st-systemtronic.com
tel. 96-1852784 · fax.34-961854482

ASSOCIATED Nº00320 AIDIMME INSTITUTO TECNOLÓGICO METALMECÁNICO, MUEBLE, MADERA, EMBALAJE Y AFINES
Calidad Controlada

Creation date: 11.08.2021 / Last revision: 15.09.2021